

GD 475

E-NR: 6309777

Glass Break Detector for Laminated Glass, Glued, Transistor output, Polarity independent

The passive glass break detector GD 475 is certified to **EN Grade 3** and is suitable for float, tempered, laminated & reinforced glass. The GD 475 is glued to the glass surface and will detect various attacks (including cutting tools) on the glass surface. The detector requires an interface unit IU 400, which senses the changes in the current characteristics of the detectors and provides alarm and fault outputs.

Features:

- Two wire, polarity independent allows for easy connection
- Detects attacks on all types of glass
- Detects crushing of glass
- Detects cutting through glass with tools
- Detection radius up to 2m
- High resistance to interference – rain, hail, foliage, doors shutting, etc.
- No sensitivity adjustment required
- Suitable for 24 hour surveillance
- Low power consumption
- DAY/NIGHT LED control
- Embedded electronics with IP 67 rating

TECHNICAL DETAILS

Cable length	6m, 10m
Approvals	F&P, FG, VdS G 121503 Class B
Supply voltage	5-15 VDC
Alarm indication	LED

GD 475

24 November 2026

Operating temperature	-40 – +55°C
Housing protection class	IP 67
Dimensions (H x Ø) mm	11 x 26
Grade	3
Colour	White, Black
Product type	Detectors
Environment	Indoor, Outdoor
Product group	Glass break
Product feature	Adhesive-mounted, Surface-mounted
Application area	
Security certification and approval schemes	EN, F&P, FG, SBSC, VdS
Security class	3, B
Environmental class	IIIA

ORDER INFORMATION

Model	E-NR	Description
GD 475-6	6309777	Glass break detector with transistor output, glued, 6 m cable
GD 475-10	6309778	Glass break detector with transistor output, glued, 10 m cable
GD 475-6BLA		Glass break detector with transistor output, glued, 6 m cable, black
GD 475-10BLA	6310753	Glass break detector with transistor output, glued, 10 m cable, black

SCHEMATICS

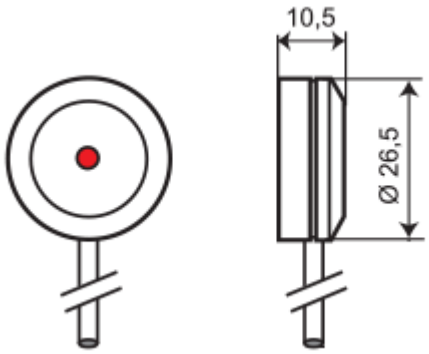

Alarmtech Sweden AB
Staffansväg 8B | 192 78 Sollentuna | Sweden
alarmtechglobal.com

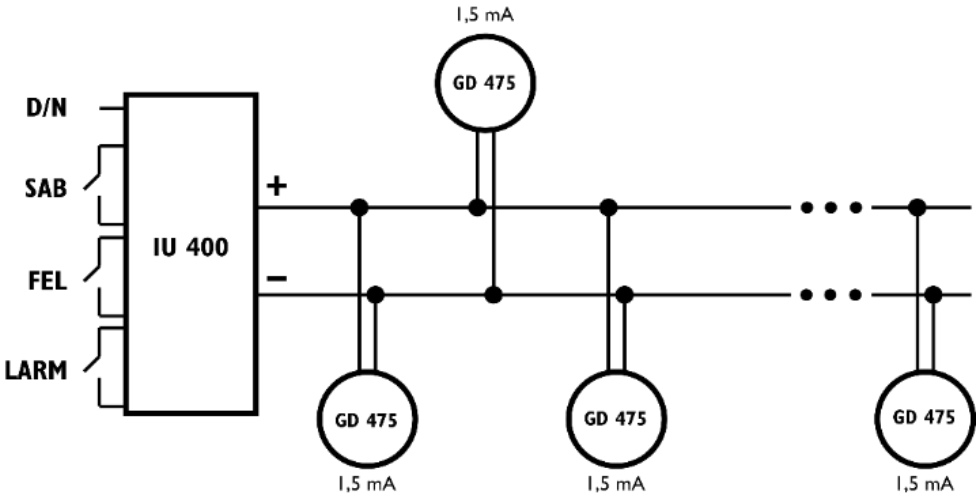
1,5 mA
GD 475
D/N
SAB
FEL
LARM
IU 400
+
–
GD 475
1,5 mA
GD 475
1,5 mA
GD 475
1,5 mA