

GD 375-S

E-NR: 6332538

This product has been discontinued and replaced with: GD 475-SJ

The GD 375-S has the same features as the GD 375 with transistor output and can be directly connected to a control panel via the junction box JB 103-4.

The detector has a coiled cable with a modular connector that plugs into the junction box JB 103-4, which allows it to be quickly and easily disconnected from the detector loop when, for example, cleaning windows.

TECHNICAL DETAILS

Supply voltage	polaritetsoberoende
Alarm indication	LED
Operating temperature	-40 – +70°C
Housing protection class	IP 67
Dimensions (L x W x H) mm	91 x 31 x 23
Dimensions (H x Ø) mm	11 x 27

ORDER INFORMATION

Model	E-NR	Description
GD 375-S	6332538	Glass break detector for laminated glasswith transistor output, glued, coiled cablewith 4-pin modular connector plug
GD 375-SJ	6332539	Glass break detector for laminated glasswith transistor output, glued, coiled cablewith 4-pin modular connector plug and junctionbox JB 103-4

GD 375-S

23 November 2026

SCHEMATICS

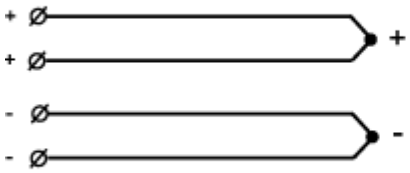

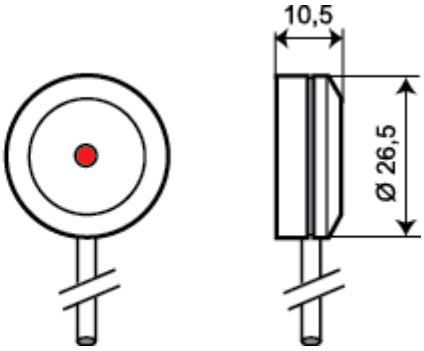

Alarmtech Sweden AB
Staffansväg 8B | 192 78 Sollentuna | Sweden
alarmtechglobal.com