

GD 335

E-NR: 6332525

Glass Break Detector, Glued

The GD 335 is a glass break detector with transistor output that is connected to a control panel via an IU 300 interface unit. It is especially designed for monitoring shop windows, sliding glass doors, ordinary windows and other exposed glass surfaces, both in public spaces and private homes. It can be used on windows with protective film if the detector is mounted directly onto the glass and not on the film (a 5-10 cm hole must be cut out the film). It can also be used on glass cabinets to protect various types of equipment. The GD 335 glass break detector is activated when the glass is shattered or broken and is highly resistant to interference with the glass or in its immediate environment, which makes it ideal for 24-hour monitoring. Its circular design guarantees correct positioning. The GD 335 is glued to the glass pane and each detector is supplied with a stencil to mark the mounting location, a glue applicator and cable clamps for quick and easy installation.

For laminated glass please use GD 475.

TECHNICAL DETAILS

Cable length	3m, 6m, 10m
Maximum coverage	2 m radius (standard 3 mm glass)
Approvals	Class 2, EN 50131-2-7-2:2013 Grade 2, SBSC 10-32, VdS Klass B – G192532
Supply voltage	4-15 VDC
Current consumption	5 µA (7,5 mA alarm)
Alarm output	Transistor output
Alarm indication	LED
Operating temperature	-40°C – +70°C
Housing protection class	IP 67
Dimensions (H x Ø) mm	11 x 27

ALARMTECH

High quality security solutions

GD 335

24 November 2026

Grade	2
Product type	Detectors
Environment	Indoor, Outdoor
Product group	Glass break
Product feature	Adhesive-mounted, Surface-mounted
Application area	
Security certification and approval schemes	EN, FG, SBSC, VdS
Security class	2, B
Environmental class	IIIA

ORDER INFORMATION

Model	E-NR	Description
GD 335	6332525	Glass break detector with transistor output, glued, 3 m cable
GD 335-6	6332526	Glass break detector with transistor output, glued, 6 m cable
GD 335-10	6332527	Glass break detector with transistor output, glued, 10 m cable

SCHEMATICS

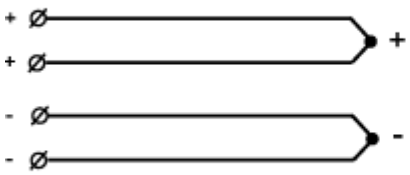

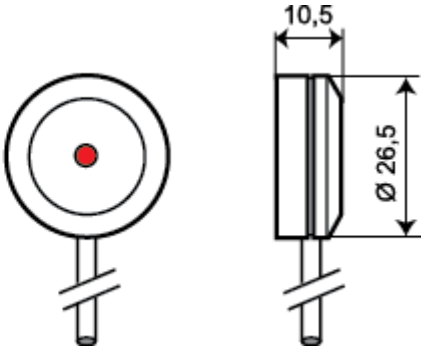

Alarmtech Sweden AB

Staffansväg 8B | 192 78 Sollentuna | Sweden

alarmtechglobal.com