

4103R

E-NR: 6301736

REDLINE MODULE BOX, PLASTIC IN RED WITH PLACE FOR UP TO 3 TERMINAL BLOCKS

Empty module box for installation of fire systems.

Empty box in red with visible or hidden label window.

Suitable for fire installations.

Customized to fit all our terminal blocks eg.

- 1-3 pcs Terminal blocks with dimensions 116x40 mm.
- 1 pcs larger terminal block with dimensions 116x80 mm.

Incl. 4 spacers for mounting our terminal blocks.

The box is flame-retardant according to UL 94 V-0.

4103.02R: IP44
4103.03R: IP4X

TECHNICAL DETAILS

Label window	No, Yes
Dimensions (L x W x H) mm	134 x 152 x 50
Product type	Connection accessories
Environment	Indoor
Enclosure	Plastic
Enclosure size	Module with 3 terminal blocks
Product line	Fatum

ALARMTECH

High quality security solutions

4103R

25 November 2026

Product feature	Surface-mounted
Accessory type	Module series (Empty)

ORDER INFORMATION

Model	E-NR	Description
4103.02R	6301736	MODULE BOX, PLASTIC IN RED; IP44; 3 plint
4103.03R	6301737	MODULE BOX, PLASTIC IN RED WITH LABEL WINDOW; IP4X; 3 plint

SCHEMATICS

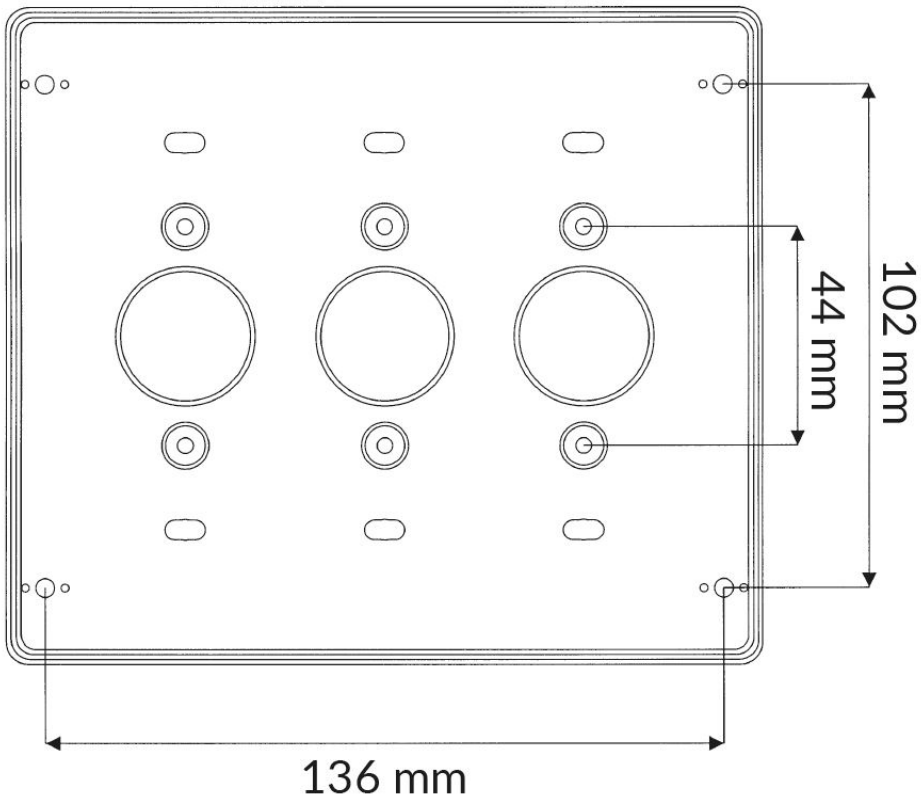

Alarmtech Sweden AB
Staffansväg 8B | 192 78 Sollentuna | Sweden
alarmtechglobal.com