# 3202.02

## MODULE BOX METAL WITH PLACE FOR UP TO 2 TERMINAL BLOCKS

### Technical data

| | |
|---|---|
| Dimensions (L x W x H) mm | 128 x 126 x 38 |

**Empty module box for installation of alarm, access and fire systems.**

Empty box with white lid with hidden label window.

Customized to fit all our terminal blocks eg.

- 1-2 pcs Terminal blocks with dimensions 116x40 mm.
- 1 pcs larger terminal block with dimensions 116x80 mm.

Incl. Spacer pack 12.7 mm (4 spacers, 4 screws and 4 plugs)

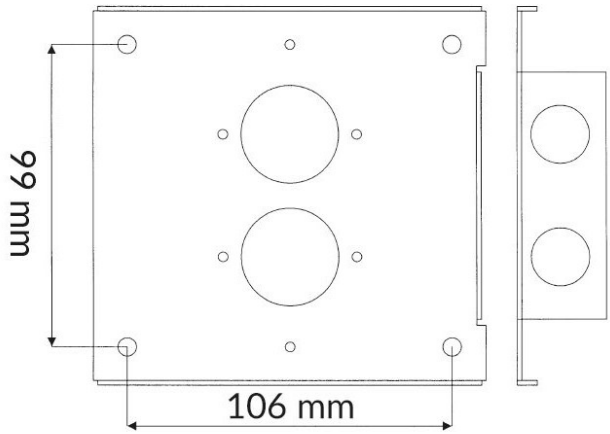

## Related products and accessories

| | | |
|---|---|---|
| 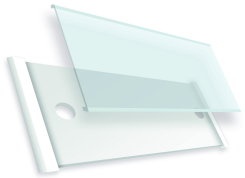 | **3132.01**<br><br>WALL LABEL FOR EASY LABELING | 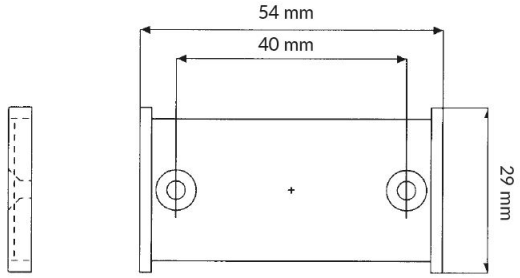 |